CAD FILE:

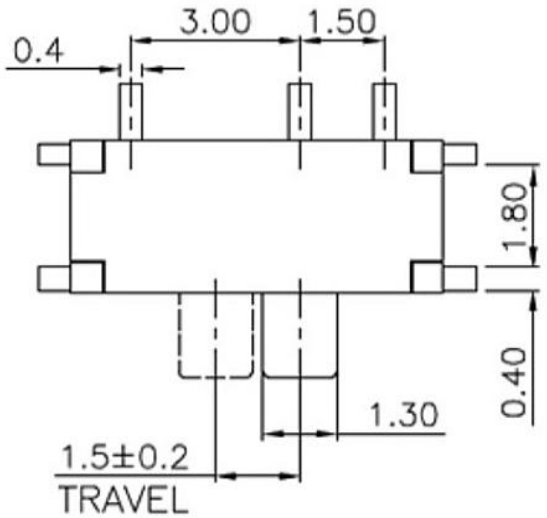

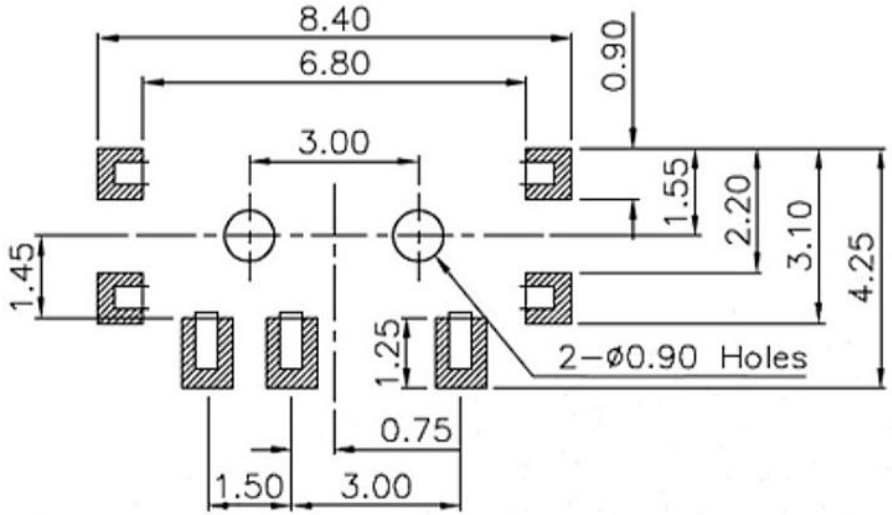

PCB Layout(Pattern side)

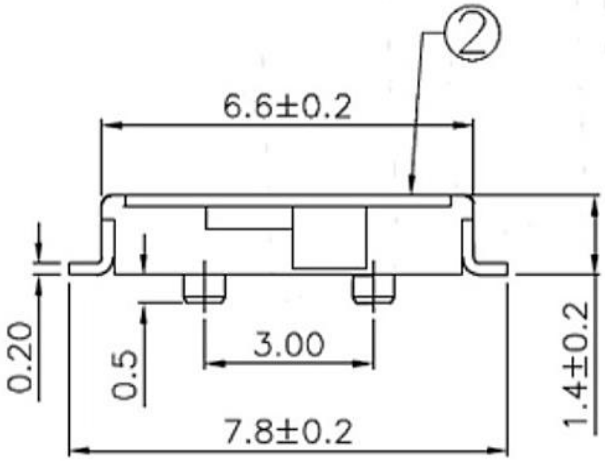

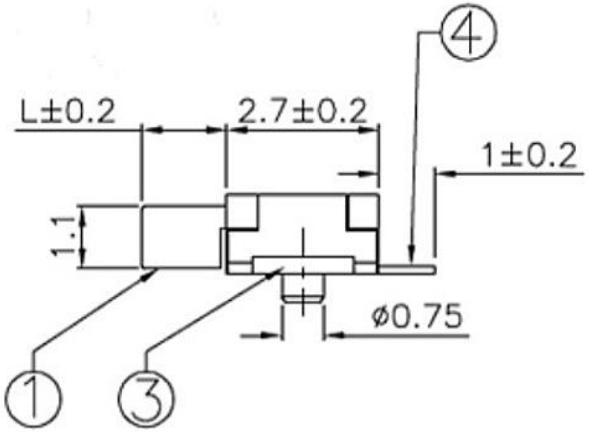

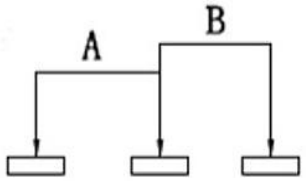

Circuit Diagram

注:"*"表示关键尺寸(6个)

NO.	PARTS	MATERIALS	Q'TY	FINISH
8				
7	STEEL BALL	STEEL	1	NATURAL
6	SPRING	STEEL WIRE	1	NATURAL
5	CONTACT CLIP	PBS STRIP	2	Ag PLATED
4	TERMINAL	BRASS STRIP	8	Ag PLATED
3	BASE	PHENOLIC RESIN	1	NATURAL
2	FRAME	STEEL STRIP	1	Ni PLATED
1	KNOB	POM	1	BLACK

TOLERANCE UNLESS SPECIFIED
WITHIN
OVER

ISSUE	DATE	DESCRIPTIONS OF REVISION	APPD.
A	2012-10-26	初 版	

TITLE : SLIDE SWITCH
MODEL:
UNIT : mm
SCALE: 3:1
DRWG NO.:

DWN.		2012-10-26
CHK'D		2012-10-26
APPD.		

東莞市高迪電子有限公司
DONGGUAN GAODI ELECTRONICS CO., LTD.